THIS COPY IS PROVIDED ON A RESTRICTED BASIS AND IS NOT TO BE USED IN ANY WAY DETRIMENTAL TO THE INTERESTS OF PANDUIT CORP.

PANDUIT P/N	WEIGHT
UICFP2**	.54 LB/10 PCS (244.0 g/10 PCS)

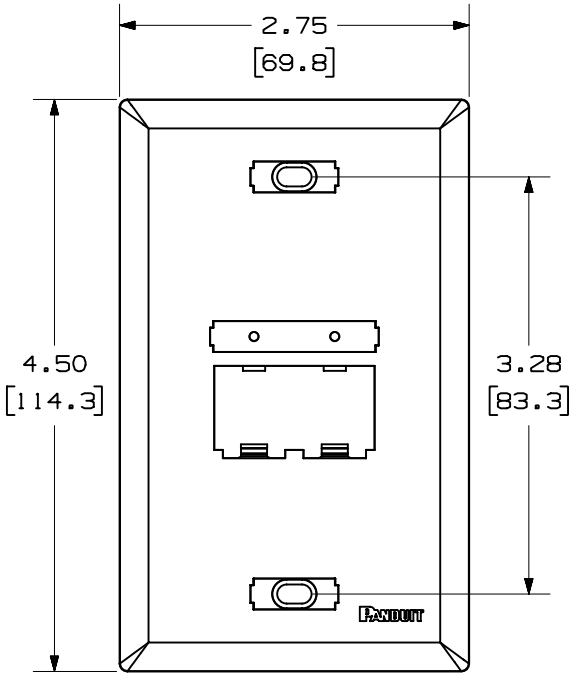

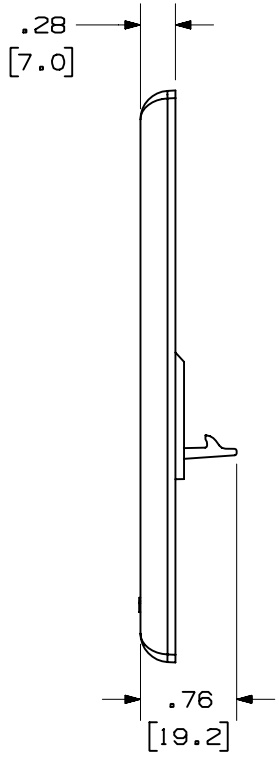

NOTES:
1. SEE CURRENT CATALOG FOR ADDITIONAL PART NUMBER SUFFIXES TO INDICATE COLOR AND OR PACKAGE QUANTITY.
2. SEE CATALOG FOR COMPLETE LIST OF PARTS APPLICABLE FOR USE WITH THIS PART.
3. DIMENSIONS IN PARENTHESES ARE IN METRIC.
4. PART INCLUDES:
   - 1- FACEPLATE
   - 1- CLEAR SCREW COVER
   - 1- COLOR COORDINATED SCREW COVER
   - 1- CLEAR LABEL COVER
   - 2- MOUNTING SCREW

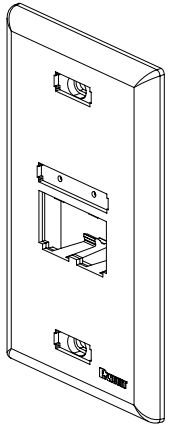

REV	DATE	BY	CHK	DESCRIPTION	ECN - R	CUST	SUP	OTH
R	7-24-02	JsP		RELEASED TO PRODUCTION	01279-06			

MODEL FILENAME: M01279BA_UICFP2_03.PRT

DRAWING FILENAME: M01279BA_DC_03A.PRT

SIZE: A

MINI-COM™ ULTIMATE ID™ 2 POSITION
VERTICAL CLASSIC SERIES
FACEPLATE CUSTOMER DRAWING

PANDUIT™ CORP.
TINLEY PARK, ILL 60477

THIRD ANGLE PROJECTION

ALL DIMENSIONS ARE GIVEN IN INCHES, UNLESS OTHERWISE SPECIFIED.
DIMENSIONAL TOLERANCES ARE:
(.X) ± (.XXX) ±.010(.3)
(.XX) ±.03(.8) ANGLES ±

DRAWN BY: JsP
DATE: 7-24-02
CHK'D:

REVIEW DRAWING NUMBERS

MATERIAL: ABS

I.I. NUMBER: N/A
PRODUCT SPEC: N/A
WORK INSTRUCTION: N/A
SCALE: NONE
PART NO.: UICFP2**
DRAWING NO.: 01279-06